Station DC power reliability ensures a high station availability of mission-critical safety devices, controls, alarms, switchgear, instrumentation, PLCs and inverters. **StatiVolt Rectifiers** are designed and built for decades of robust, industrial duty and field serviceability. Over 40 years of their sales and applications to batteries and critical DC loads is testimony to their reliability.

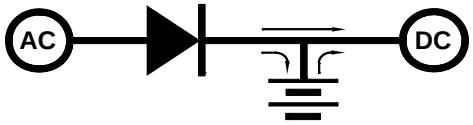

Features

Reliability by Design

- Robust industrial duty
- Multi-redundant diode rectifier
- Electronic + magnetic V regulation
- Failsafe, soft-switching, low noise
- Natural convection cooled

Regulated DC Power

- Constant V battery charging & supply
- Minimal noise & ripple voltage
- Remote sensing built-in

Protection

- Input & output circuit breakers
- Inherent surge rejection
- Inherent AC fault limiting
- Transformer isolation
- Output current limiting
- Failsafe output V control

Versatile Functions & Options

- Input Power Factor Correction
- Extra Wide Input V Range
- AC Input / Start Delay Timer
- Battery Charge Functions
- Battery Charge Options
- Alarm / Annunciation Options
- Distribution Breakers
- Special Utility Options
- Tropical / Humidity Proofing

DC System Capability

- Simple, parallel rectifier operation
- Rectifier(s) + Battery + Distribution
- Total, single-vendor DC power solutions

DC Amps	AC In	Cabinet Style	DC Power (kW) 12 V	24 V	48 V	120 V	240 V
5	1Ø	W				0.7	1.4
15	1Ø	W	0.2	0.4	0.8	2.1	4.1
25	1Ø	W, B	0.4	0.7	1.4	3.5	6.9
50	1Ø	W, B	0.7	1.4	2.8	6.9	
75	1Ø	W, B	1.1	2.1	4.1		
100	1Ø	W, B	1.4	2.8	5.5		
150	1Ø	B	2.1				
50	3Ø	B				7	14
75	3Ø	B, F			4	11	21
100	3Ø	B, F		3	6	14	28
150	3Ø	B, F		4	8	20	42
200	3Ø	F		6	11	28	55
300	3Ø	F		8	17	41	83
400	3Ø	F		11	22	55	110
500	3Ø	F		14	28	69	138
600	3Ø	F		17	33	83	166
800	3Ø	F		22	44	110	221
1000	3Ø	F		28	55	138	
1200	3Ø	F		33	66	166	

Warranty & Service

- 2 year comprehensive warranty
- 5 year major component warranty
- 25 year design life, easily field-serviced

Contents

Specifications 2
1Ø Cabinets 3
3Ø Cabinets 4
Model Numbers, Options 5

© Staticon Ltd. 2008, 2010

Specifications

Power Conversion Design

- Transformer input (60 or 50 Hz)
- Full-wave, silicon diode rectifier
  2 pulse conversion (1Ø)
  6 pulse conversion (3Ø, 50-150 A)
  12 pulse conversion (3Ø, 200-1200 A)
- Soft switching, low noise

Output Control

- Closed-loop, negative feedback control
- Analog circuitry (no digital electronics)
- High speed electronic V sensing
- FET based voltage-to-current control
- Failsafe, magnetic shunt regulation

Steady-State V Regulation

- ±0.5% (full load, ±10% ACV, ±5% ACf)

Output V Range

- Nominal V +20% for float / equalize V

Dynamic V Response

- ±5% for 50% step-loads (battery load)
- Recovery in 3-6 cycles (50-100 ms)

Output Ripple Voltage

- ≤ 1% rms (on resistive load)
- ≤ 0.5 % rms (on typical battery)

Parallel Rectifier Operation

- Load sharing within 10% unit I_{DC}

Charge Functions & Options

- Choose from 4 functions
- Choose from 3 options

Annunciation & Meters

- Standard annunciation & meters:

AC Normal	green LED
General Fail	red LED, contacts
Float / Equal	green / yellow LEDs
V+A Meter	digital, 1% accuracy

- Choose from 8 alarm / meter options
- Contacts are form 'C' contacts rated: 10 A @ 120 V_{AC} , 5 A @ 30 V_{DC}

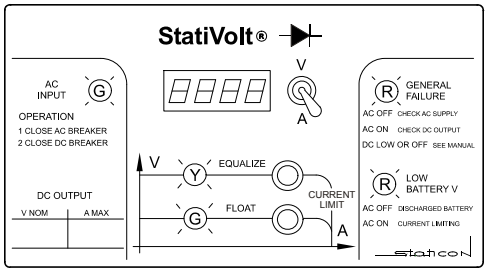

Control Label

Full Load Efficiency (%)

DC Amps	AC	12 V	24 V	48 V	120 V	240 V
5	1Ø				82	83
15	1Ø	66	76	81	83	84
25	1Ø	67	77	82	84	85
50	1Ø	69	79	84	86	
75-100	1Ø	70	80	85		
150	1Ø	70				
50	3Ø				90	90
75	3Ø			90	90	90
100-800	3Ø		85	90	91	92
1000-1200	3Ø		85	90	91	

Protection

- AC breaker rated I ≈ 1.5 x full load I_{AC}
- DC breaker rated I ≈ 1.5 x full load I_{DC}
- Input transformer, electrical isolation
- I^2t breaker coordinated diode arrays
- Failsafe I limit set at 120% of rated I_{DC}
- Optional charge I limit to 20 A / 100 AH

Surge Tolerance

- Inherent, inductive surge tolerance is 4 kV (1Ø) & 6 kV (3Ø) peak for 8 ms
- Withstands ANSI / IEEE C62.41 (IEC 6080-4) standard surge V waveforms

Electromagnetic Interference

- Conducted / radiated EMI within CSA C108.8 & FCC Part 15 Class B limits

In-Rush & Input power Factor

- In-rush I = 3x full load A for 1-3 cycles
- Input PF ≈ 0.80 (PF ≥ 0.90 optional)

Input Harmonic Distortion

- Full load V THD is < 3%, I THD is: ≈ 15% (3Ø units), 35% (1Ø units)

Audible Noise

- 55-65 dBA (at 1 m, rating dependent)

Cabinets

- EEMAC / NEMA type 1, per CSA
- Front accessible, side / top cable entry
- 14 / 10 gage steel panels / mounts
- Powder coated, baked enamel finish

Environmental Requirements

- Natural convection cooled, top, side, rear clearances required for air flow.
- -20°C to +40°C continuous operation
- RH < 95% non-condensing

Reliability

- MTBF is 300 k hrs (1Ø), 200 k hrs (3Ø)
- MTTR is 1 hour (spares on / near site)

Design & Test Standards

- CSA certified (C22.2 No. 107.1, 107.2)
- Generally per NEMA, ANSI, IEEE, IEC
- Magnetics operate at max. 125°C
- Magnetics designed for Class 220°C

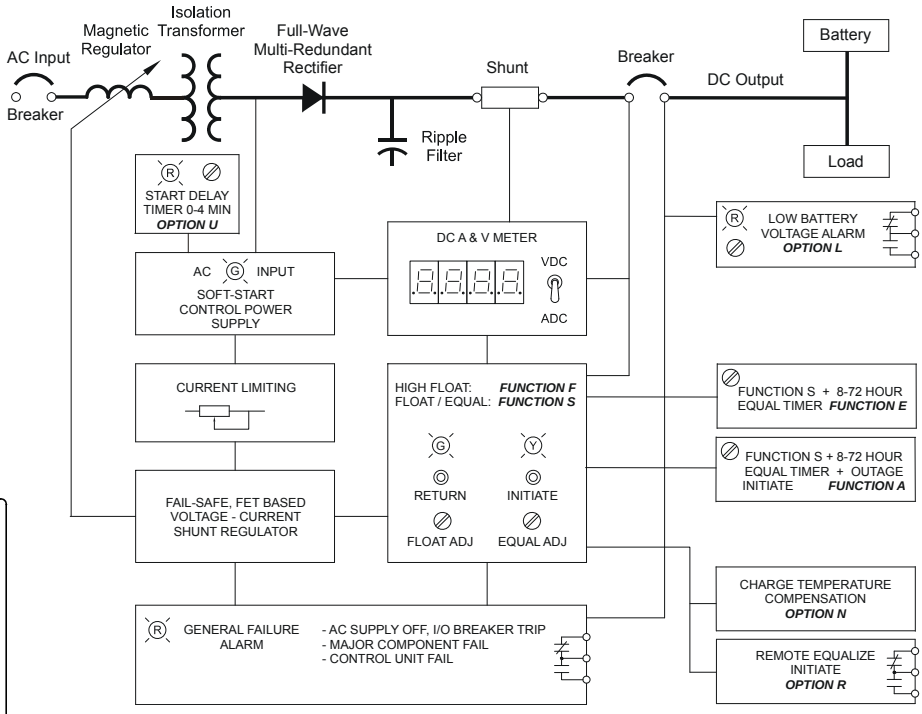

Single-Line Diagram with Control Functions

© Staticon Ltd. 2008, 2010

1Ø Standard Cabinets

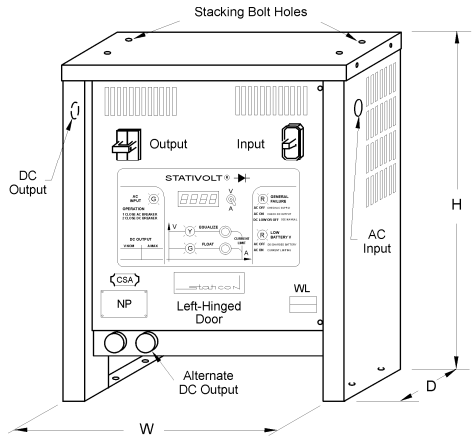

Wall / Bench Mount Cabinet (W) Stackable

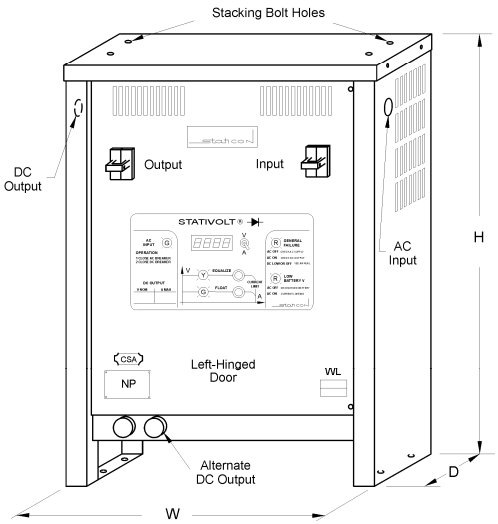

Bench / Floor Mount Cabinet (B) Stackable

Nominal DC V	A	Input	Style	Dimensions mm (in) H	W	D	Weight kg (lb)
12	**15**	1Ø	W	610 (24)	508 (20)	381 (15)	35 (77)
12	**25**	1Ø	W	610 (24)	508 (20)	381 (15)	40 (88)
12	**50**	1Ø	W	610 (24)	508 (20)	381 (15)	60 (132)
12	**75**	1Ø	W	610 (24)	508 (20)	381 (15)	70 (154)
12	**100**	1Ø	W	610 (24)	508 (20)	381 (15)	80 (176)
12	**150**	1Ø	B	762 (30)	559 (22)	508 (20)	90 (198)
24	**15**	1Ø	W	610 (24)	508 (20)	381 (15)	50 (110)
24	**25**	1Ø	W	610 (24)	508 (20)	381 (15)	60 (132)
24	**50**	1Ø	W	610 (24)	508 (20)	381 (15)	70 (154)
24	**75**	1Ø	W	610 (24)	508 (20)	381 (15)	80 (176)
24	**100**	1Ø	B	762 (30)	559 (22)	508 (20)	110 (243)
48	**15**	1Ø	W	610 (24)	508 (20)	381 (15)	70 (154)
48	**25**	1Ø	W	610 (24)	508 (20)	381 (15)	80 (176)
48	**50**	1Ø	W	610 (24)	508 (20)	381 (15)	105 (232)
48	**75**	1Ø	B	762 (30)	559 (22)	508 (20)	130 (287)
48	**100**	1Ø	B	762 (30)	559 (22)	508 (20)	140 (309)
120	**5**	1Ø	W	610 (24)	508 (20)	381 (15)	60 (132)
120	**15**	1Ø	W	610 (24)	508 (20)	381 (15)	90 (198)
120	**25**	1Ø	B	762 (30)	559 (22)	508 (20)	120 (265)
120	**50**	1Ø	B	762 (30)	559 (22)	508 (20)	155 (342)
240	**5**	1Ø	W	610 (24)	508 (20)	381 (15)	80 (176)
240	**15**	1Ø	B	762 (30)	559 (22)	508 (20)	125 (276)
240	**25**	1Ø	B	762 (30)	559 (22)	508 (20)	155 (342)

Construction

NEMA type 1 cabinets. Front access.
14 gage steel panels.
10 gage mounting channels.
Standard finish is ASA 61 grey, powder coated, baked enamel.

Notes

Actual systems may vary from these cabinet standards according to job-specific options or custom features.

All dimensions in **mm** (**inches**).
Drawings are not to scale.

Installation

Top / side cable entry.

Required Ventilation Clearance:
W Cabs: 102 (4) side / rear.
B Cabs: 152 (6) side / rear.

© Staticon Ltd. 2008, 2010

3Ø Standard Cabinets

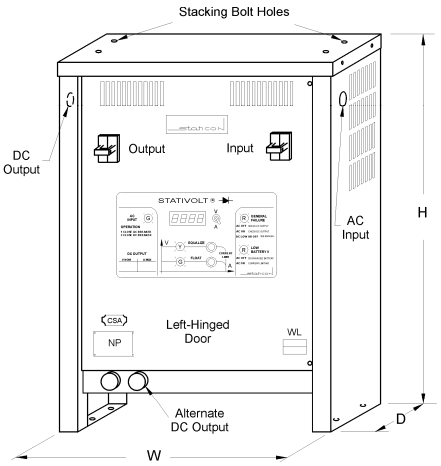

Bench / Floor Mount Cabinet (B) Stackable

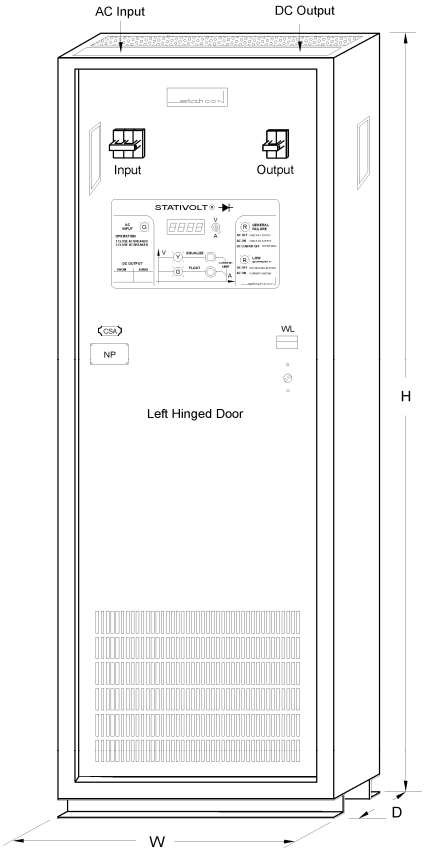

Floor Mount Cabinet (F)

Floor Anchoring Detail

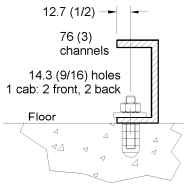

Installation

Top / side cable entry.

Required Ventilation Clearance:
B Cabs: 152 (6) side / rear.
F Cabs: 305 / 610 (12 / 24) rear / top.

Construction

NEMA type 1 cabinets. Front access.
14 gage steel panels.
10 gage mounting channels.
Standard finish is ASA 61 grey, powder coated, baked enamel.

Notes

Actual systems may vary from these cabinet standards according to job-specific options or custom features.

All dimensions in **mm** (**inches**).
Drawings are not to scale.

Nominal DC V	A	Input	Style	Dimensions H	W	mm (in) D	Weight kg (lb)
24	**100**	3Ø	B	762 (30)	559 (22)	508 (20)	115 (255)
24	**150**	3Ø	B	762 (30)	559 (22)	508 (20)	175 (386)
24	**200**	3Ø	F	1600 (63)	610 (24)	610 (24)	250 (551)
24	**300**	3Ø	F	1600 (63)	610 (24)	610 (24)	300 (661)
24	**400**	3Ø	F	1600 (63)	610 (24)	610 (24)	350 (772)
24	**500**	3Ø	F	1905 (75)	610 (24)	610 (24)	400 (882)
24	**600**	3Ø	F	1905 (75)	610 (24)	610 (24)	450 (992)
24	**800**	3Ø	F	1905 (75)	610 (24)	610 (24)	540 (1191)
24	**1000**	3Ø	F	1905 (75)	762 (30)	762 (30)	680 (1499)
24	**1200**	3Ø	F	1905 (75)	762 (30)	762 (30)	820 (1808)
48	**75**	3Ø	B	762 (30)	559 (22)	508 (20)	155 (342)
48	**100**	3Ø	B	762 (30)	559 (22)	508 (20)	180 (397)
48	**150**	3Ø	F	1600 (63)	610 (24)	610 (24)	270 (595)
48	**200**	3Ø	F	1600 (63)	610 (24)	610 (24)	330 (728)
48	**300**	3Ø	F	1600 (63)	610 (24)	610 (24)	440 (970)
48	**400**	3Ø	F	1600 (63)	610 (24)	610 (24)	475 (1047)
48	**500**	3Ø	F	1905 (75)	610 (24)	610 (24)	500 (1102)
48	**600**	3Ø	F	1905 (75)	610 (24)	610 (24)	560 (1235)
48	**800**	3Ø	F	1905 (75)	762 (30)	762 (30)	650 (1433)
48	**1000**	3Ø	F	1905 (75)	762 (30)	762 (30)	860 (1896)
48	**1200**	3Ø	F	1905 (75)	762 (30)	762 (30)	1030 (2271)
120	**50**	3Ø	B	762 (30)	559 (22)	508 (20)	215 (474)
120	**75**	3Ø	B	762 (30)	559 (22)	508 (20)	250 (551)
120	**100**	3Ø	F	1600 (63)	610 (24)	610 (24)	380 (838)
120	**150**	3Ø	F	1600 (63)	610 (24)	610 (24)	450 (992)
120	**200**	3Ø	F	1600 (63)	610 (24)	610 (24)	520 (1146)
120	**300**	3Ø	F	1600 (63)	610 (24)	762 (30)	660 (1455)
120	**400**	3Ø	F	1905 (75)	762 (30)	762 (30)	770 (1698)
120	**500**	3Ø	F	1905 (75)	762 (30)	762 (30)	950 (2094)
120	**600**	3Ø	F	1905 (75)	762 (30)	762 (30)	1050 (2315)
120	**800**	3Ø	F	1905 (75)	914 (36)	914 (36)	1200 (2646)
120	**1000**	3Ø	F	1905 (75)	914 (36)	914 (36)	1350 (2976)
120	**1200**	3Ø	F	2057 (81)	914 (36)	914 (36)	1620 (3571)
240	**50**	3Ø	F	1600 (63)	610 (24)	610 (24)	300 (661)
240	**75**	3Ø	F	1600 (63)	610 (24)	610 (24)	330 (728)
240	**100**	3Ø	F	1600 (63)	610 (24)	610 (24)	520 (1146)
240	**150**	3Ø	F	1905 (75)	610 (24)	610 (24)	630 (1389)
240	**200**	3Ø	F	1905 (75)	762 (30)	762 (30)	730 (1609)
240	**300**	3Ø	F	1905 (75)	762 (30)	762 (30)	1050 (2315)
240	**400**	3Ø	F	1905 (75)	762 (30)	762 (30)	1200 (2646)
240	**500**	3Ø	F	1905 (75)	762 (30)	762 (30)	1350 (2976)
240	**600**	3Ø	F	1905 (75)	762 (30)	762 (30)	1620 (3571)
240	**800**	3Ø	F	2057 (81)	914 (36)	914 (36)	2160 (4762)
240	**1000**	3Ø	F	2057 (81)	914 (36)	914 (36)	2700 (5952)

© Staticon Ltd. 2008, 2010

Model Numbers

_ CT 48 B 75 E 56 76 B E __

- Options (see below)
- Charge Program F, S, E, A, M
- **W**all, **B**ench, **F**loor mount
- Height (cm)
- Width (cm)
- AC input voltage code (table at right)
- Output current rating (Amperes)
- Ripple Filter (1% rms ripple)
- Nominal DC voltage rating
- For ≥ 2 parallel rectifier systems (one cabinet), add # prefix

AC V Code	Ø	60Hz	50Hz
110-120-127	1	A	
120-208-240	1	T	
208-240	1	B	BX
220-230-240	1	U	UX
480	1	G	
600	1	H	
208-220	3	E	EX
380-400-415	3	L	LX
480	3	F	
600	3	K	

Options

AC Input Options	Code
Input PF correction to ≥ 0.90	P
AC input / start delay timer, 0 - 4 minutes adjustable	U
+10 / -15% AC input voltage range	consult Staticon
+10 / -20% AC input voltage range	consult Staticon
Battery Charging Functions	
High float, single voltage for VRLA batteries or battery eliminator	F
PB initiate equalize, PB return to float	S
PB initiate 8-72 hour equalize timer, auto / PB return to float	E
PB / AC outage initiate (0-15 minute adj. initiate time) 8-72 hour equal timer, auto / PB return to float	A
DC Output & Battery Charging Options	
Standard ripple filter: ≤ 1% ripple voltage	B
Enhanced noise filter: ≤ 40 mV rms 1Ø, 2.5 mV rms 3Ø	C
Charge voltage temperature compensation	N
Charge current limiting to 20 A / 100 AH	CI
Remote equalize initiate via 1 set of form 'C' contacts	R
Annunciation Options	
AC input failure alarm, 1 red LED, 1 set of form 'C' contacts	O
Low battery voltage alarm, 1 red LED, 1 set of form 'C' contacts, V adjustable	L
High voltage alarm, 1 red LED, 1 set of form 'C' contacts, V adjustable (not req'd. but available)	H
High voltage shutdown, 1 red LED, 1 set of form 'C' contacts, V adjustable (not req'd. but available)	Hs
Ground leakage alarm, 2 red LEDs, 1 set of form 'C' contacts, 1-5 mA adjustable	G
Equalize charge annunciation, 1 set of form 'C' contacts (yellow LED is standard)	J
Common system failure alarm, 1 extra set of form 'C' contacts	Ca
Charge / discharge ammeter, analog, 2% accuracy	Q
DC System / Battery Options	
Distribution / protection circuit breakers, fuses or switches	D
Battery system mounted within the charger cabinet	B
Larger cabinet(s) + battery shelves to include charger / battery systems	consult Staticon
Utility Options	
Keyed door locks	K
Auxiliary contacts for any single input, output or distribution breaker	Ac
I / O breaker visible contacts and lock attachments (3Ø chargers only)	V
High interrupting-ampere capacity input / output circuit breakers	I
White interior paint	W
Zinc Rich powder coat paint primer for enhanced cabinet corrosion protection	Z
Packaging Options	
Tropical / humidity proofing, acrylic sprayed components and wires	T
Export packaging per international ocean freight requirements	

© Staticon Ltd. 2008, 2010